Signal Door Acess Controller Wiring Diagram

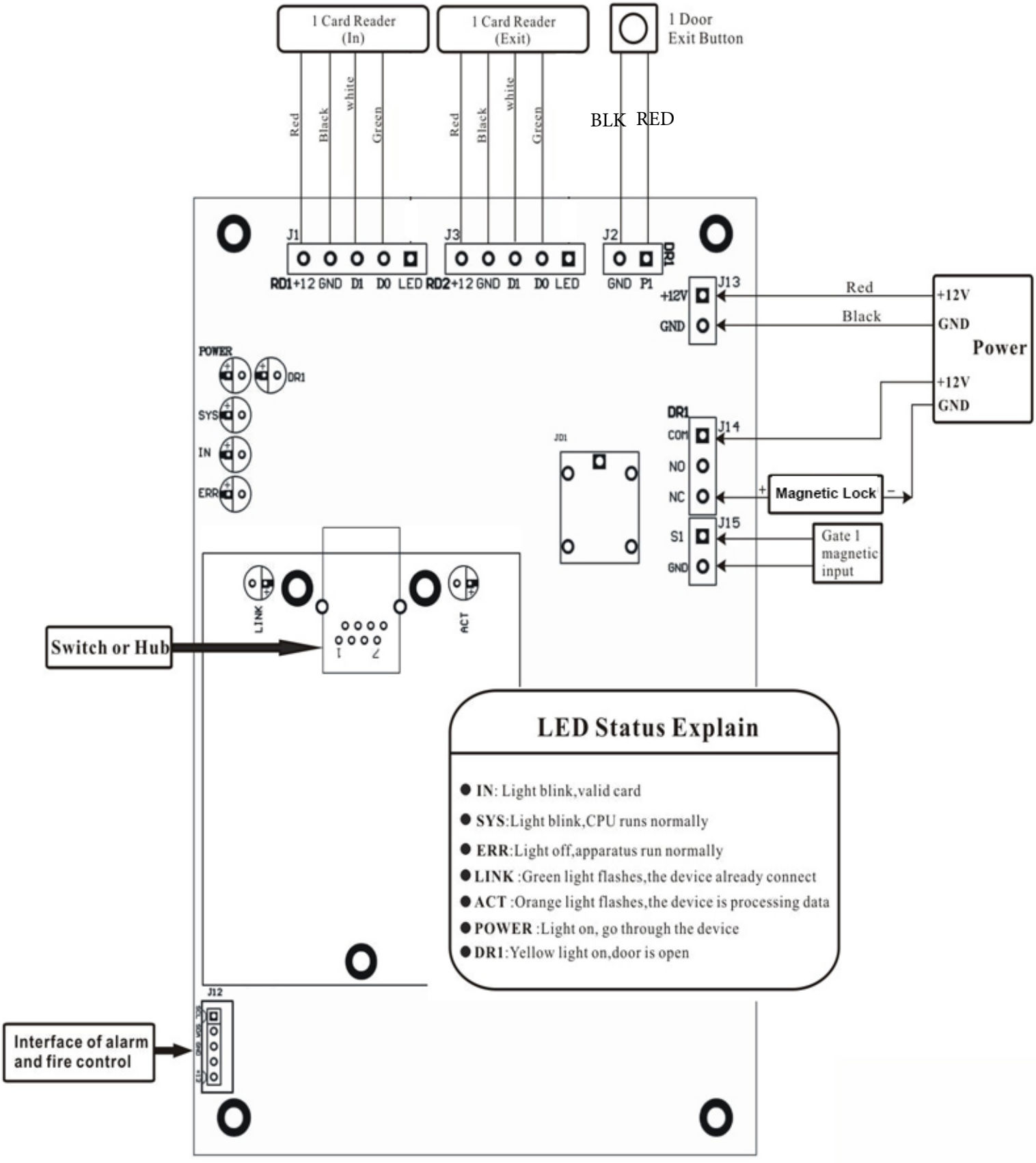

LED Status Explain

- **IN**: Light blink,valid card
- **SYS**:Light blink,CPU runs normally
- **ERR**:Light off,apparatus run normally
- **LINK** :Green light flashes,the device already connect
- **ACT** :Orange light flashes,the device is processing data
- **POWER** :Light on, go through the device
- **DR1**:Yellow light on,door is open