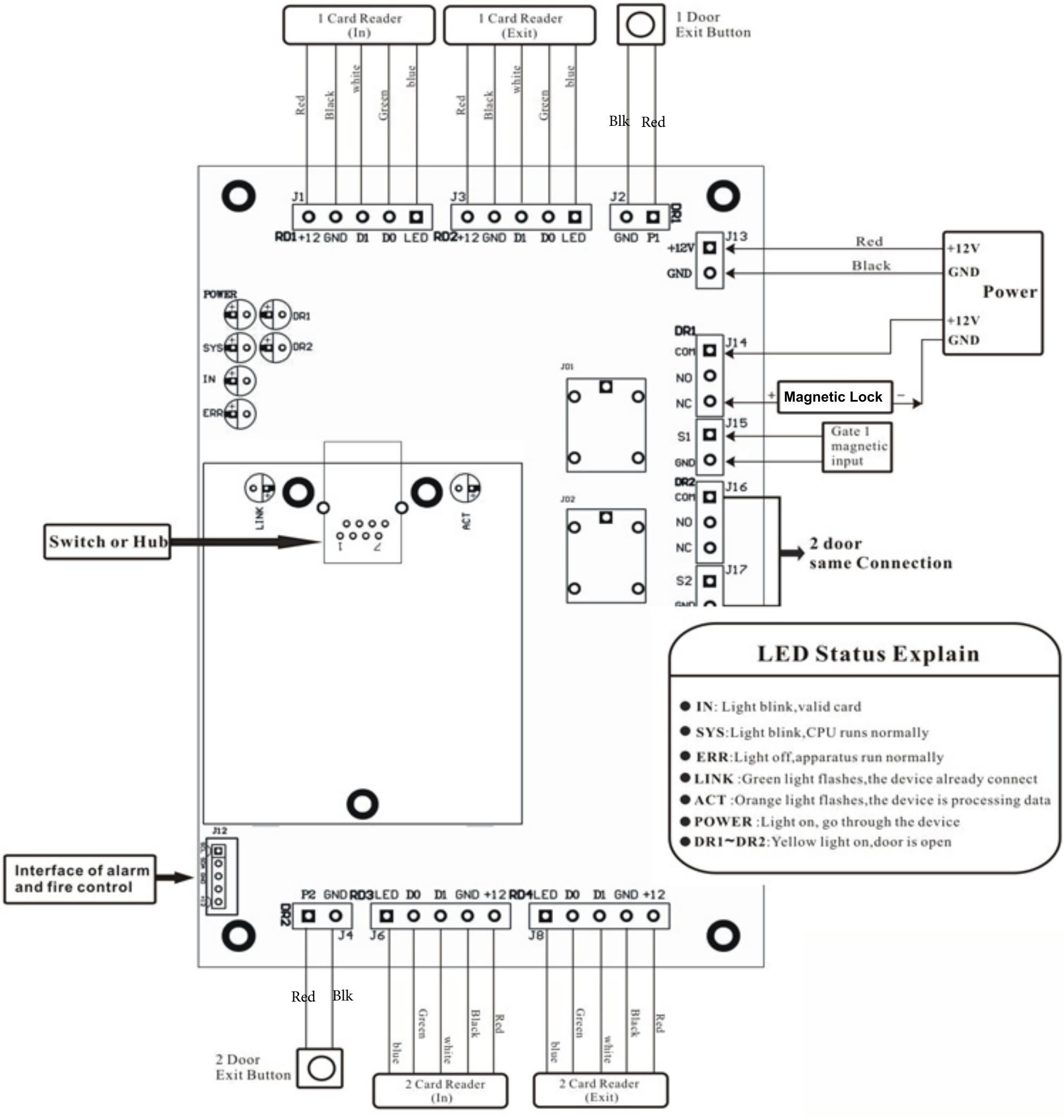Double Door Acess Controller Wiring Diagram