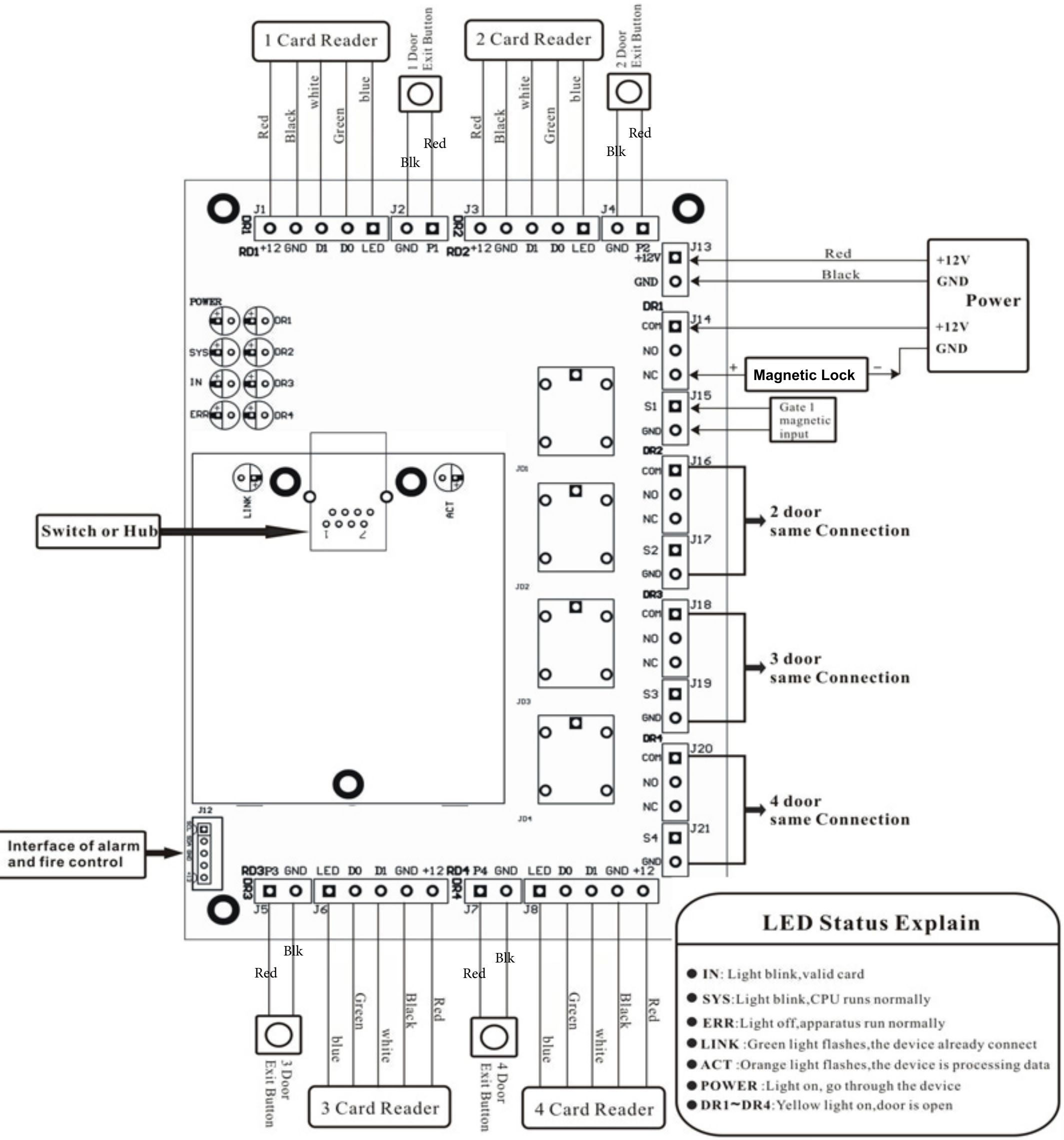Four Door Acess Controller Wiring Diagram